REVISIONS				
ZONE	REV	DESCRIPTION	DATE	APPROVED
	A	REDRAWN & RELEASED	10/97	10/97

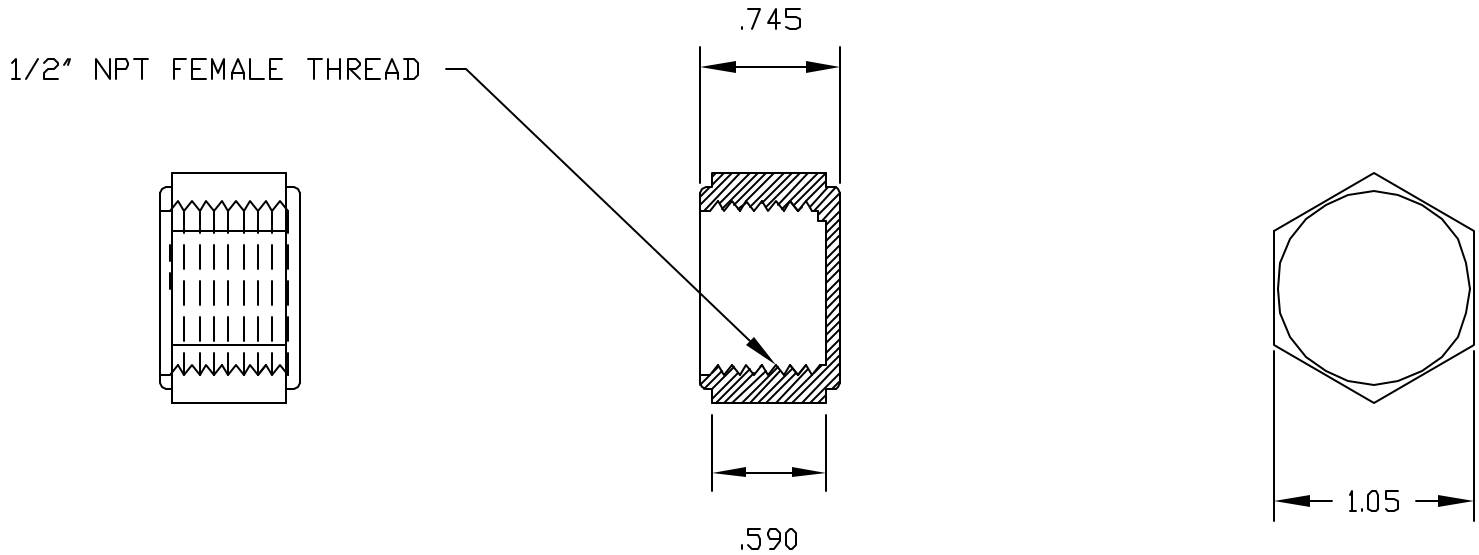

CONTROLLED DOCUMENT
ONLY IF IN RED

CONFIDENTIAL
THIS PRINT AND THE SPECIFICATIONS ARE THE PROPERTY OF THOGUS PRODUCTS COMPANY AND HAVE BEEN ISSUED WITH THE UNDERSTANDING THAT IT WILL NOT BE REPRODUCED, REVEALED TO OR USED FOR THE MANUFACTURE FOR OTHERS AND WILL BE RETURNED UPON REQUEST.

UNLESS OTHERWISE SPECIFIED
DIMENSIONS ARE IN INCHES
TOLERANCES
DECIMALS: .XX +/-.05, .XXX +/-.015
ANGULAR: +/-0.5

DRAWN: NM
DATE: 10/97
FILENAME: HC8PPB
MATERIAL: POLYPROPYLENE BLACK

Part Name: 1/2 NPT FEMALE HEX CAP

THOGUS PRODUCTS
33490 PIN OAK PARKWAY
AVON LAKE OHIO 44012

Part Number: HC8/PPB
REV: A
SCALE: 1:1
SHEET 1 OF 1