REVISIONS				
ZONE	REV	DESCRIPTION	DATE	APPROVED
	A	REDRAWN & RELEASED	11/97	11/97
	B	UPDATE DWG. WITH NEW THREAD TOOLING	5/8/00	BM
	C	MODIFY BARB	9/03	

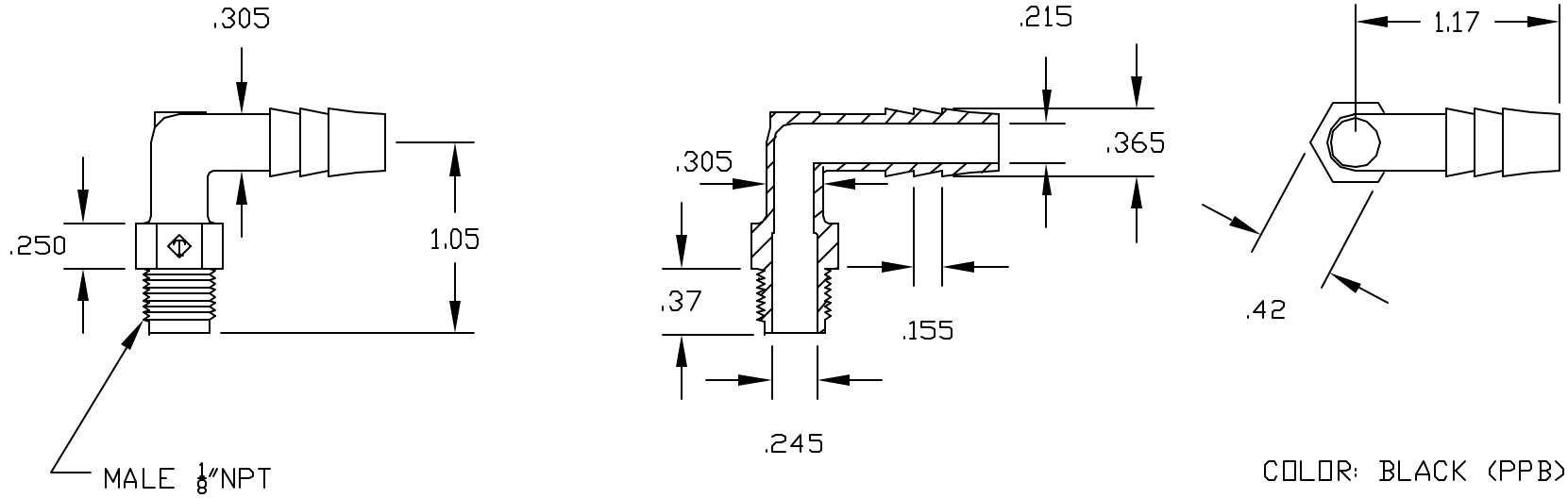

COLOR: BLACK (PPB)

NATURAL (PPN)

CONTROLLED DOCUMENT
ONLY IF IN RED

CONFIDENTIAL
THIS PRINT AND THE SPECIFICATIONS ARE THE PROPERTY OF THOGUS PRODUCTS COMPANY AND HAVE BEEN ISSUED WITH THE UNDERSTANDING THAT IT WILL NOT BE REPRODUCED, REVEALED TO OR USED FOR THE MANUFACTURE FOR OTHERS AND WILL BE RETURNED UPON REQUEST.

UNLESS OTHERWISE SPECIFIED DIMENSIONS ARE IN INCHES
TOLERANCES
DECIMALS XX +/-.05 XXX +/-.015
ANGULAR +/-0.5

DRAWN NM DATE 11/97
FILENAME: 2025PP
MATERIAL POLYPROPYLENE

PART NAME: 1/8 NPT X 5/16 BARBED ELBOW

THOGUS PRODUCTS
33490 PIN OAK PARKWAY
AVON LAKE OHIO 44012

Part NUMBER TE2025/PP

SCALE 1:1 SHEET 1 OF 1