REVISIONS			
REV	DESCRIPTION	DATE	APPROVED
A	REDRAWN & RELEASED	5/98	5/98
B	GATE PAD ADDED	9/98	9/98
C	UPDATE DWG	9/07	9/07

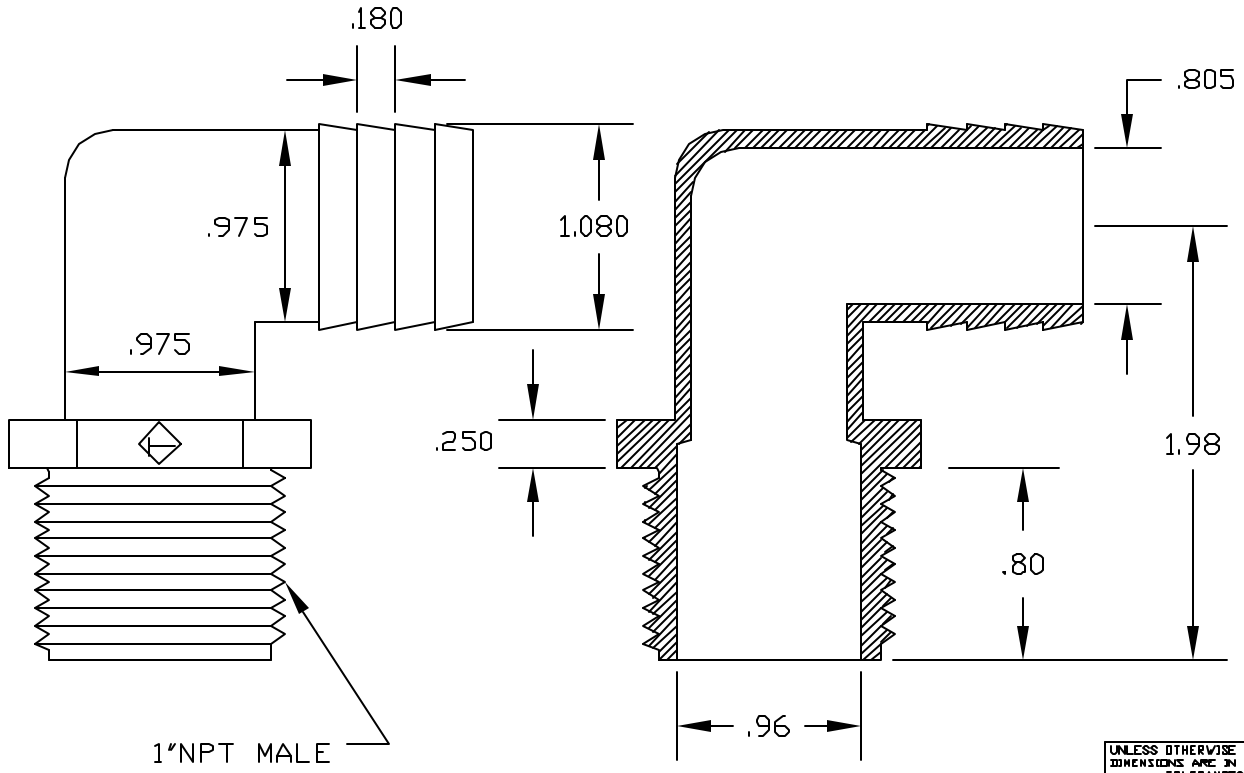

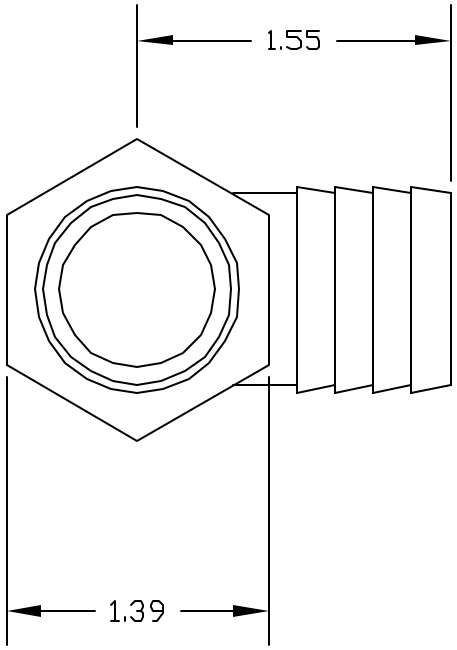

CONTROLLED DOCUMENT
ONLY IF IN RED

CONFIDENTIAL
THIS PRINT AND THE SPECIFICATIONS ARE THE PROPERTY OF THOGUS PRODUCTS COMPANY AND HAVE BEEN ISSUED WITH THE UNDERSTANDING THAT IT WILL NOT BE REPRODUCED, REVEALED TO OR USED FOR THE MANUFACTURE FOR OTHERS AND WILL BE RETURNED UPON REQUEST.

UNLESS OTHERWISE SPECIFIED
DIMENSIONS ARE IN INCHES
TOLERANCES
DECIMALS: .XX +/-.05, .XXX +/-.015
ANGULAR: +/-0.5

DRAWN: NM
FILENAME: 201616N
MATERIAL: NYLON

Part Name: 1NPT X 1 BARB ELBOW

THOGUS PRODUCTS
33490 PIN OAK PARKWAY
AVON LAKE OHIO 44012

Part Number: TE201616/N
REV: C
SCALE: 1:1
SHEET 1 OF 1